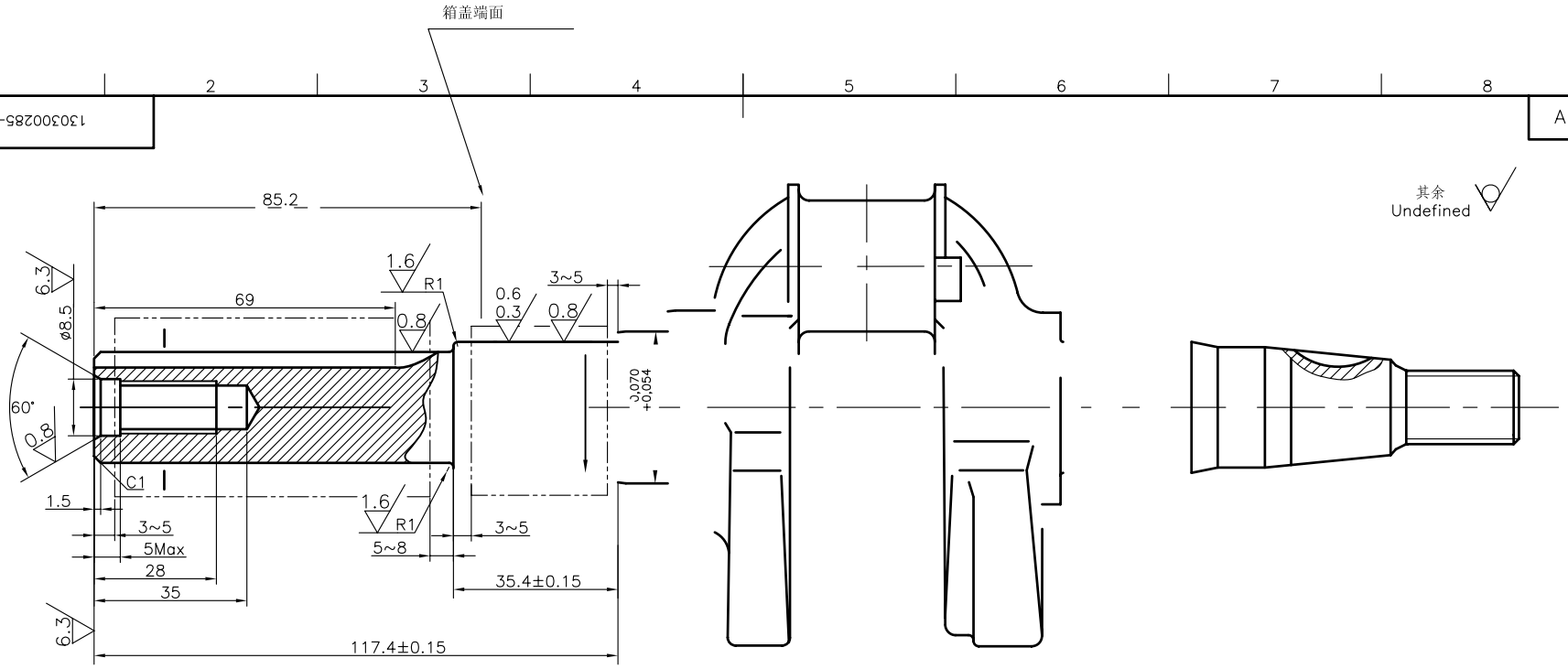

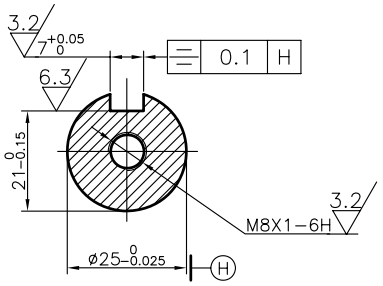

Technical Requirements

1.The crankshaft blank should go through normalizing,then hardening and tempering to 207HBS~302HBS,shotblasting or blast sanding after quenching and tempering;

2.Induction harden(high frequency) temper;flat keyway:depth 0.8~1.8, Hardness 500HV500g~600HV500g@0.05;others:depth 1~3,Hardness 500HV500g~600HV500g@0.05;then temperring;Apolished transverse section of sample should be maeasured using a microhardness tester with a 500 gram load,the effective case depth is the distance from the surface to the depth at which hardness of 400HV500g;

3.this picture is the P.T.O shaft, the detail technical requirement is the same as LC180F the shaft's 130300062-T180.

技术要求

1.毛坯经正火处理后进行调质处理,其调质硬度207HBS~302HBS,调质后应做喷丸或喷砂等处理;

2.热处理：双点划线处高频淬火,平键槽:淬硬层深0.8~1.8,硬度500HV500g~600HV500g;其余硬化层深度1~3,硬度500HV500g~600HV500g;高频淬火后应进行去应力回火;取径向切割试样，抛光后用载荷为500g的显微硬度计测量,表面硬度在距表面0.05处测量，有效硬化层深度是指表面到硬度400HV500g处的距离;

3.本图为曲轴输出端，详细技术要求参见LC180F曲轴图纸130300062-T180。

标记 Mark	处数 Places	分区 Area	更改文件号 Amended Document No	签名 Signatur	
	签名 Signature	年月日 Date		签名 Signature	年月日 Date
设计 Designed by			标准 Standard		
校对 Checked by			审核 Audited by		
工艺 Technics			批准 Approved by		

S | 1:1

130300285-T180

LC180F
曲轴(A23轴)
Crankshaft