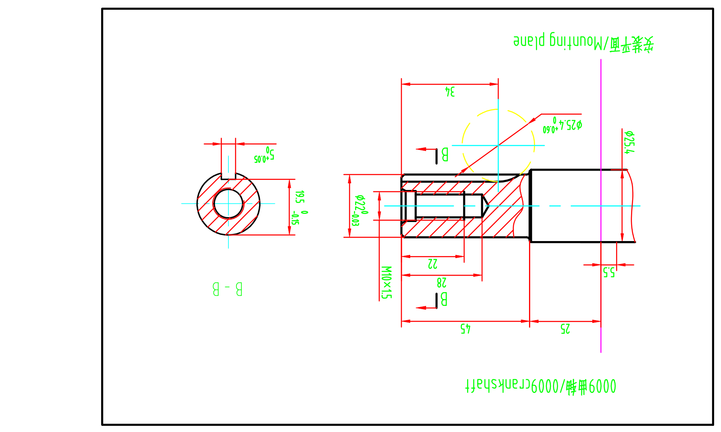

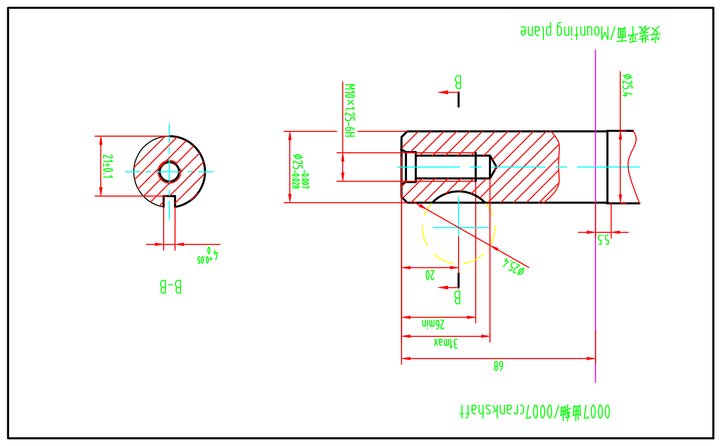

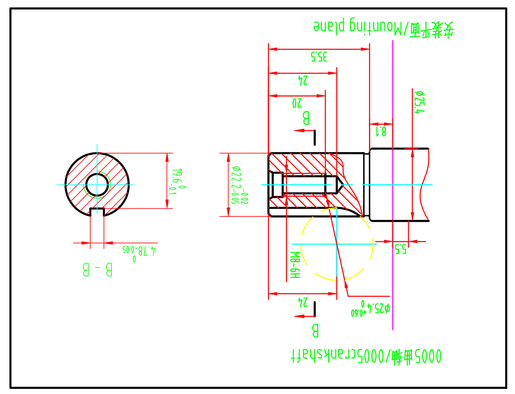

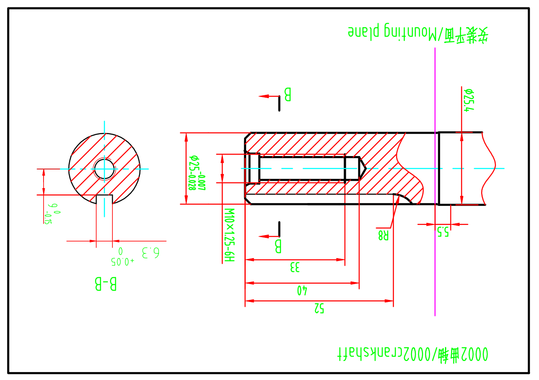

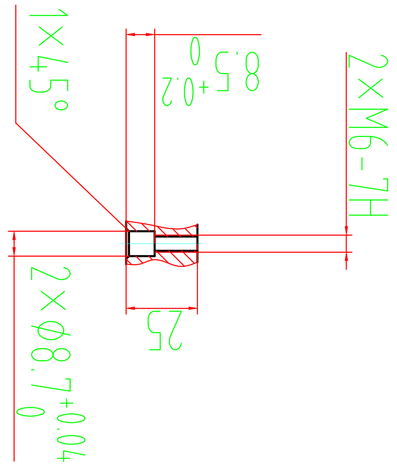

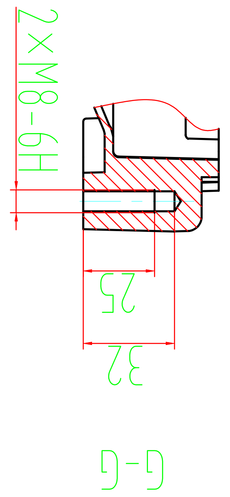

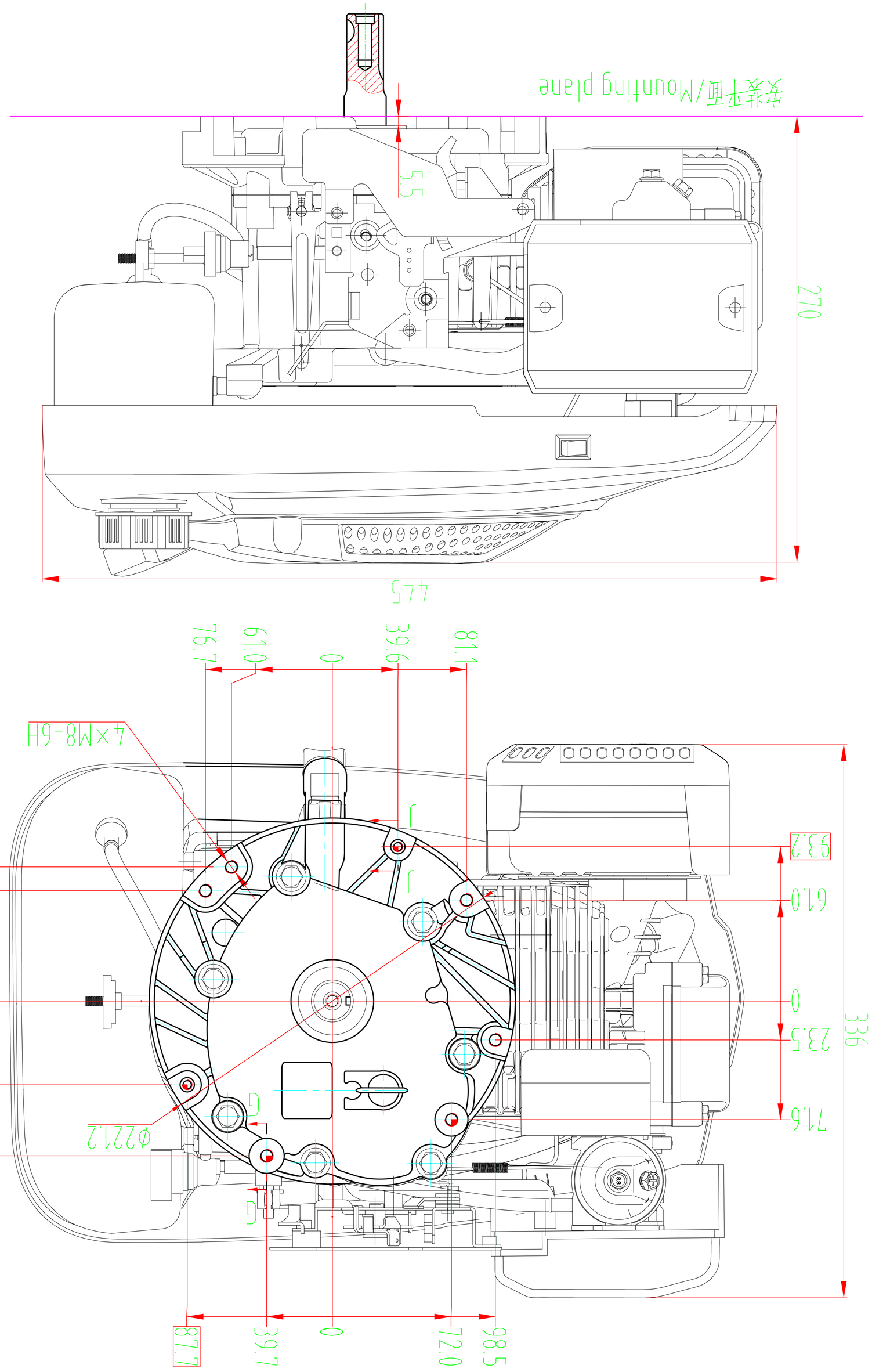

LF1P75FV安装图/LF1P75FV installation drawing