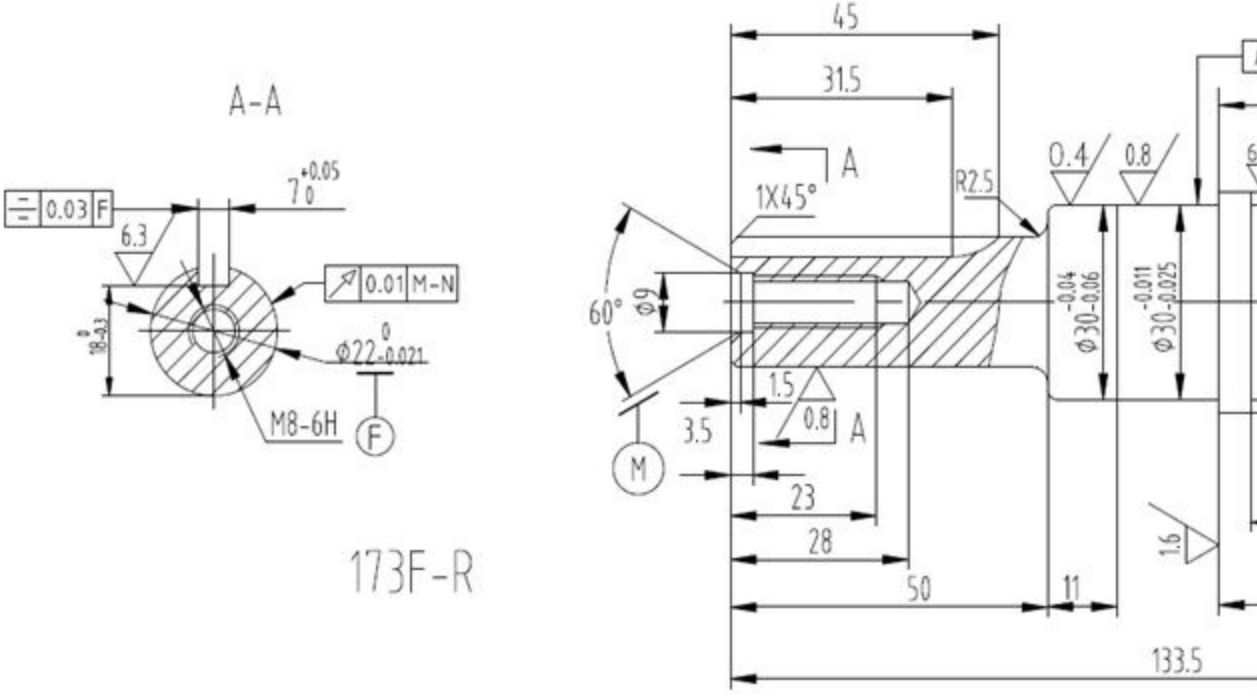
A-A
0.03 F
7 +0.05 0
6.3
0.01 M-N
18-0.3 0
Ø22 0 -0.021
M8-6H
F
173F-R
45
31.5
A
1X45°
R2.5
0.4
0.8
60°
Ø9
Ø30 -0.04 -0.06
Ø30 -0.011 -0.025
1.5
0.8
A
3.5
M
23
28
50
11
1.6
133.5